The Belleria®

Ceiling Fan

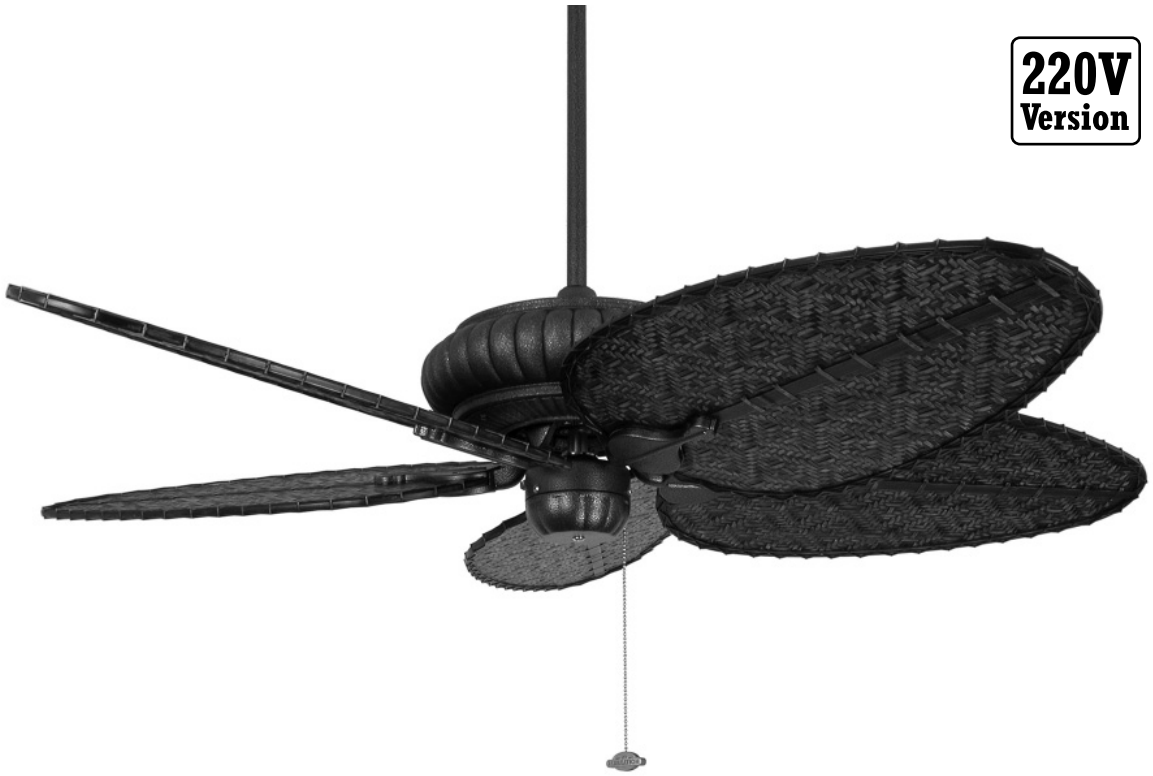

Wet Location Model

Net Weight 9.9 kg (21.78 lbs)

Model No. FP4320**-220

OWNER'S MANUAL

READ AND SAVE THESE INSTRUCTIONS

FANIMATION®

Important Safety Instructions

WARNING: To avoid fire, shock and serious personal injury, follow these instructions.

1. Read your owner's manual and safety information before installing your new fan. Review the accompanying assembly diagrams.
2. Before servicing or cleaning unit, switch power off at service panel and lock service panel disconnecting means to prevent power from being switched on accidentally. When the service disconnecting means cannot be locked, securely fasten a warning device, such as a tag, to the service panel.
3. Be careful of the fan and blades when cleaning, painting, or working near the fan. Always turn off the power to the ceiling fan before servicing.
4. Do not insert anything into the fan blades while the fan is operating.
5. Do not operate reversing switch until fan blades have come to a complete stop.

Additional Safety Instructions

1. To avoid possible shock, be sure electricity is turned off at the fuse box before wiring, and do not operate fan without blades.
2. All wiring and installation procedures must satisfy National Electrical Codes (ANSI/ NFPA 70-1999) and Local Codes. The ceiling fan must be grounded as a precaution against possible electrical shock. Electrical installation should be made or approved by a licensed electrician.
3. The fan base must be securely mounted and capable of reliably supporting at least 50 lbs. Consult a qualified electrician if in doubt.
4. The fan must be mounted with the fan blades at least 7 feet from the floor to prevent accidental contact with the fan blades.
5. Follow the recommended instructions for the proper method of wiring your ceiling fan. If you do not have adequate electrical knowledge or experience, have your fan installed by licensed electrician.

WARNING: TO REDUCE THE RISK OF SHOCK, DO NOT USE THIS FAN WITH ANY SOLID-STATE SPEED CONTROL DEVICE.

WARNING: This product is designed to use only those parts supplied with this product and/or accessories designated specifically for use with this product. Using parts and/or accessories not designated for use with this product could result in personal injury or property damage.

WARNING: To reduce the risk of personal injury, do not bend the blade bracket (flange or blade holder) when installing the brackets, balancing the blades, or cleaning the fan. Do not insert foreign objects in between rotating fan blades.

LIMITED LIFETIME WARRANTY

Extends to the original purchaser of a Fanimation Fan

1. LIMITED LIFETIME MOTOR WARRANTY - If any part of your fan motor fails, due to a defect in materials or workmanship during the lifetime of the original purchaser, Fanimation will provide the replacement part free of charge, when the defective fan is returned to our national service center. Proof of purchase is required. Customer shall be responsible for all costs incurred in the removal or reinstallation and shipping of the product for repairs or replacement.
2. ONE YEAR MOTOR LABOR WARRANTY - If your fan motor fails at any time within one year from the original purchase, due to defects in materials or workmanship, labor to repair the motor will be provided free of charge at our national service center. Purchaser will be responsible for labor charges after this one-year period. Customer shall be responsible for all costs incurred in the removal or reinstallation and shipping of the product for repairs or replacement.
3. If any other part of your fan fails at any time within one year after original purchase, due to a defect in materials or workmanship, we will repair, or replace, at our option, the defective part free of charge for parts and labor performed at our national service center.
4. Because of varying climate conditions, this warranty does not cover changes in the finish, including rusting, pitting, corroding, tarnishing, or peeling.
5. This warranty is void and does not apply to damage from improper installation, neglect, accident, misuse, exposure to extremes of heat or humidity, or as a result of any modification to the original product.
6. All costs of removal and reinstallation of the fan are the sole responsibility of the owner of the fan and not the store that sold the fan or Fanimation.
7. Fanimation reserves the right to modify or discontinue any product at any time and may substitute any part under this warranty.
8. Under no circumstances may a fan be returned without prior authorization from Fanimation. The receipt of purchase must accompany authorized returns and must be sent freight prepaid to Fanimation. The fan to be returned must be properly packed to avoid damage in transit; Fanimation will not be responsible for any damage resulting from improper packaging.
9. It is understood that any repair or replacement is the exclusive remedy available from Fanimation. There is no other expressed or implied warranty. Fanimation hereby disclaims any and all implied warranties, including, but not limited to those of merchantability and fitness for a particular purpose to the extent permitted by law. Some states do not allow limitations on implied warranties. Fanimation will not be liable for incidental, consequential, or special damages arising out of or in conjunction with product use or performance, except as may otherwise be accorded by law. This warranty gives you special legal rights and you may also have other rights that vary from state to state.
10. A certain amount of wobble is normal and should not be considered a problem or a defect.

Table of Contents

Unpacking Instructions 3
Electrical and Structural Requirements 4
How to Assemble Your Ceiling Fan 4
How to Hang Your Ceiling Fan 6
How to Wire Your Ceiling Fan - Pull Chain 7
Operating Instructions - Pull Chain 7
Installing the Canopy Housing 8
Mounting the Fan Blades 8
Maintenance 9
Blade Cleaning 9
Parts List 10
Exploded-View Drawing 11
Trouble Shooting 12

This Manual is Designed to Make it as Easy as Possible for You to Assemble, Install, Operate, and Maintain Your Ceiling Fan

Tools Needed for Assembly

- One Phillips head screwdriver
- One stepladder
- One ¼″ blade screwdriver
- One wire stripper
- Four wire connectors (supplied)

⚠ WARNING

Before assembling your ceiling fan, refer to section on proper method of wiring your fan (page 4). If you feel you do not have enough wiring knowledge or experience, have your fan installed by a licensed electrician.

Materials

Wiring outlet box and box connectors must be of type required by local code. The minimum wire would be a 4-conductor (3-wire with ground) of the following size:

Installed Wire Length	Wire Size A.W.G.
Up to 50 ft.	14
50 - 100 ft.	12

NOTE: *Place the parts from the loose parts bags in a small container to keep them from being lost. If any parts are missing, contact your local retailer.*

Unpacking Instructions

For your convenience, check-off each step. As each step is completed, place a check mark. This will ensure that all steps have been completed and will be helpful in finding your place should you be interrupted.

⚠ WARNING

Do not install or use fan if any part is damaged or missing. This product is designed to use only those parts supplied with this product and/or any accessories designated specifically for use with this product by Fanimation. Substitution of parts or accessories not designated for use with this product by Fanimation could result in personal injury or property damage. Contact your retail store for missing or damaged parts.

1. Check to see that you have received the following parts:

NOTE: *If you are uncertain of part description, refer to exploded view illustration. (Figure 1, page 11)*

- Fan Motor/Housing assembly
- Mounting Bracket
- Wet Downrod/Hanger Ball assembly
- Ceiling Canopy
- Motor Coupling Cover
- Blade Holder Arms (5)
- Blade Holder Covers (5)
- Hardware bag:
  - Eleven ¼-20 x ⅝″ (blade holder to fan motor hub) screws with lockwashers
  - Eleven 3/16-24 x 10mm (blade to blade holder) washer-head screws
  - Two 5/32″ threaded rods
  - Two 5/32″ lockwashers
  - Two knurled knobs
  - Four wire connectors
  - Phillips screwdriver, 4″
  - Chain Coupler
  - Chain Fob
  - Balance Kit
  - Two 8-32 junction box screws

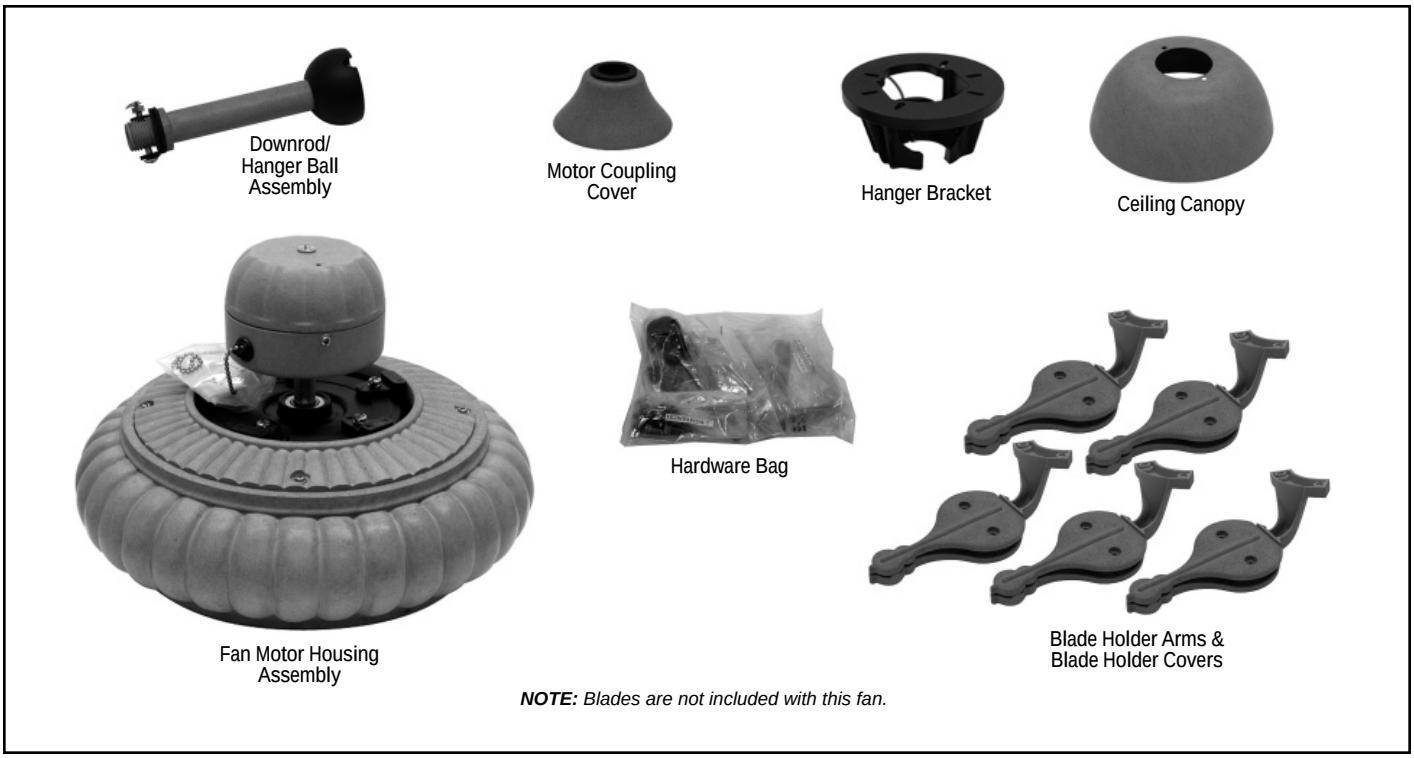

NOTE: *Blades are not included with this fan.*

Electrical and Structural Requirements

Your new ceiling fan will require a grounded electrical supply line of 220 volts AC, 50 Hz circuit. The outlet box must be securely anchored and capable of withstanding a load of at least 50 lbs. **Figure 1** depicts different structural configurations that may be used for mounting the outlet box.

⚠ WARNING

To reduce the risk of fire, electrical shock, or personal injury, mount fan to outlet box marked acceptable for fan support of 22.7 kg (50 lbs) or less. Use screws supplied with outlet box. Most outlet boxes commonly used for support of light fixtures are not acceptable for fan support and may need to be replaced. Consult a qualified electrician if in doubt.

If your fan is to replace an existing light fixture, turn electricity off at the main fuse box at this time and remove the existing light fixture.

⚠ WARNING

Turning off wall switch is not sufficient. To avoid possible electrical shock, be sure electricity is turned off at the main fuse box before wiring. All wiring must be in accordance with National and Local codes and the ceiling fan must be properly grounded as a precaution against possible electrical shock.

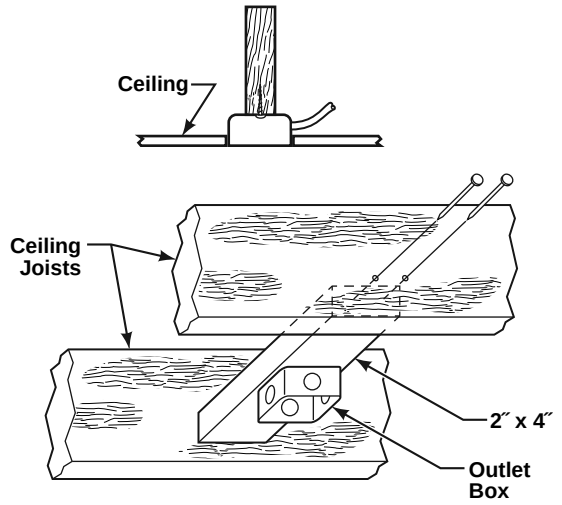

Figure 1

⚠ WARNING

To avoid fire or shock, follow all wiring instructions carefully. Any electrical work not described in these instructions should be done or approved by a licensed electrician.

How to Assemble Your Ceiling Fan

1. Prior to assembly, set aside and save the hardware bag(s) packed in the packing.

2. Remove the Hanger Ball by loosening the setscrew in the Hanger Ball until the ball falls freely down the Downrod. (Figure 1) Remove the Pin from the Downrod, then remove the Hanger Ball. Retain the Pin and Hanger Ball for reinstallation in Step 8.

3. The fan comes with brown, orange, blue, and green/yellow 80″ wires. Separate and untwist the four wires. Route the wires through the Downrod.

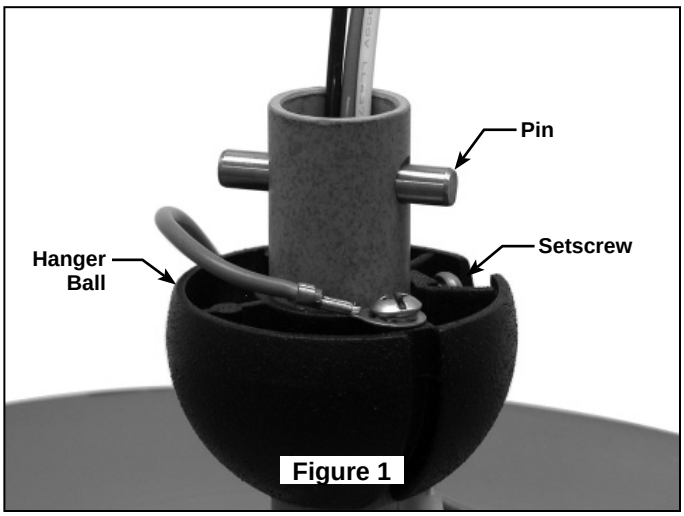

Figure 1

How to Assemble Your Ceiling Fan (cont'd)

NOTE: *You will be using either the 6˝ downrod supplied with your fan or an optional downrod purchased separately.*

4. Loosen the two setscrews and hex nuts in the Downrod Support. Screw Downrod into Coupler. Align the Clevis Screw holes in the Downrod with the holes in the Downrod Support. (Figure 2)

NOTE: *The setscrews, hex nuts and rubber washers must be properly installed as described earlier, or fan-wobble could result.*

5. Install the Clevis Screw, Rubber Washers and secure with the Clevis Locknut and Hairpin Clip. (Figure 3) The Clevis Locknut, Hairpin Clip and Washers must be properly installed to prevent the Clevis Screw from working loose.

6. Slide the Motor Coupling Cover down until it touches the top of the motor housing. (Figure 4)

7. Route wires through opening in Canopy. Position Canopy on fan shown with open side facing up. (Figure 5)

8. Reinstall the Hanger Ball (Figure 5) on the Downrod as follows. Route the three 80˝ wires through the Hanger Ball. Position the Pin through the two holes in the Downrod and align the Hanger Ball so the Pin is captured in the groove in the top of the Hanger Ball. Pull the Hanger Ball up tight against the pin. **Securely tighten the setscrew in the Hanger Ball. A loose setscrew could create fan wobble.**

⚠ WARNING

It is critical that the clevis screw in the downrod support is properly installed and the setscrews and nuts are securely tightened. Failure to verify that the clevis screw, nuts, hairpin clip and setscrews are properly installed could result in the fan falling.

9. The fan comes with blue, brown, orange, and green/yellow leads. Before installing fan, measure up approximately 6-9 inches above top of Down rod/Hanger Ball Assembly. Cut off excess wire and strip back insulation ½˝ from end of wire.

10. You have now completed the assembly of your new ceiling fan. You can now proceed with the hanging and the electrical wiring of your fan.

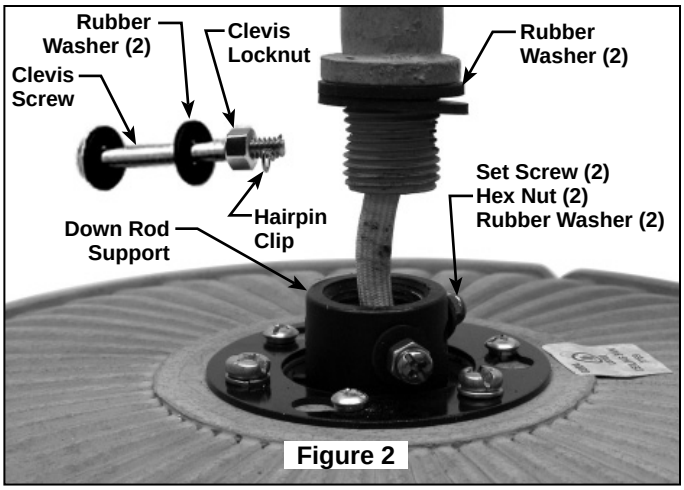

Figure 2

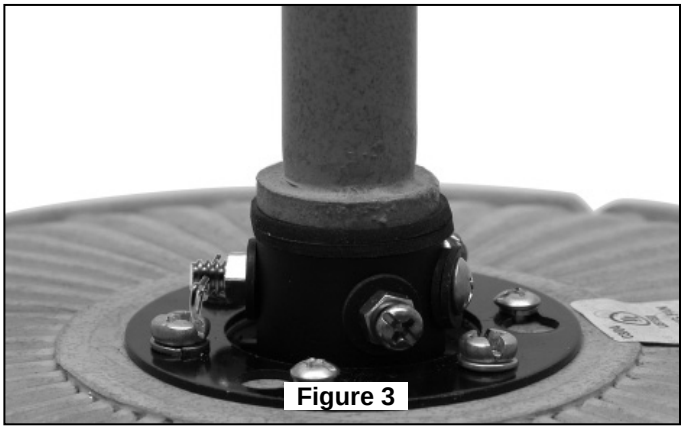
Figure 3

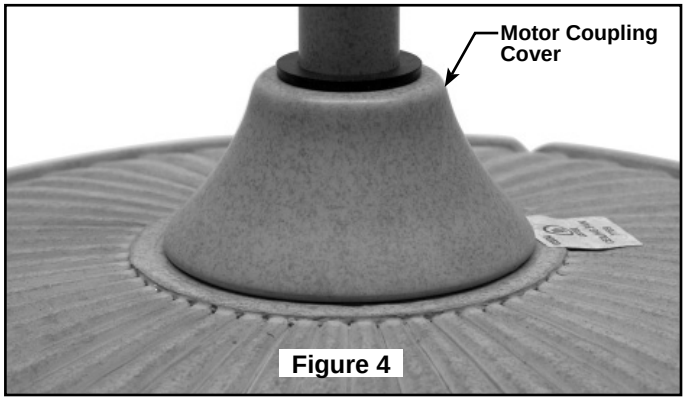

Figure 4

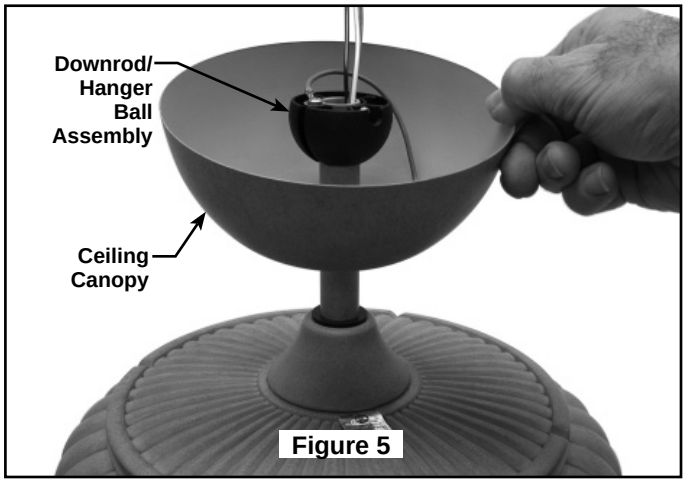

Figure 5

How to Hang Your Ceiling Fan

⚠ WARNING

To avoid possible electrical shock, be sure electricity is turned off at the main fuse box before hanging.
NOTE: If you are not sure if the outlet box is grounded, contact a licensed electrician for advice, as it must be grounded for safe operation.

⚠ WARNING

The fan must be hung with at least 7´ of clearance from floor to blades (Figure 1)

⚠ WARNING

The outlet box must be securely anchored and acceptable for fan support of 22.7kg (50 lbs) or less. Hanger bracket must seat firmly against outlet box. If the outlet box is recessed, remove wallboard until bracket contacts box. If bracket and/or outlet box are not securely attached, the fan could wobble or fall.

CAUTION

Do not connect fan blades until the fan is completely installed. Hanging fan with blades connected may result in damage to the fan blades.

1. After securing outlet box with two machine screws to building structure. Securely attach the hanger bracket to the outlet box using the outlet box screws and washers supplied with the outlet box (Figure 2).

NOTE: *Outlet box screws pass through slotted holes of the hanger bracket (Figure 2).*

2. Pull the electric wires in the outlet box down through the opening in the hanger bracket and bend wires up and out of the way so that the hanger ball will easily fit into the hanger bracket.

3. Carefully lift the fan and seat the downrod/hanger ball assembly on the hanger bracket that was just attached to the outlet box (Figure 3). Be sure the groove in the ball is lined up with tab on the hanger bracket (Figure 2).

4. After making the wire connections, the wires should be spread apart with the grounded conductor and the equipment-grounding conductor on one side of the outlet box and the ungrounded conductor on the other side of the outlet box.

⚠ WARNING

Failure to seat tab in groove could cause damage to electrical wires and possible shock or fire hazard.

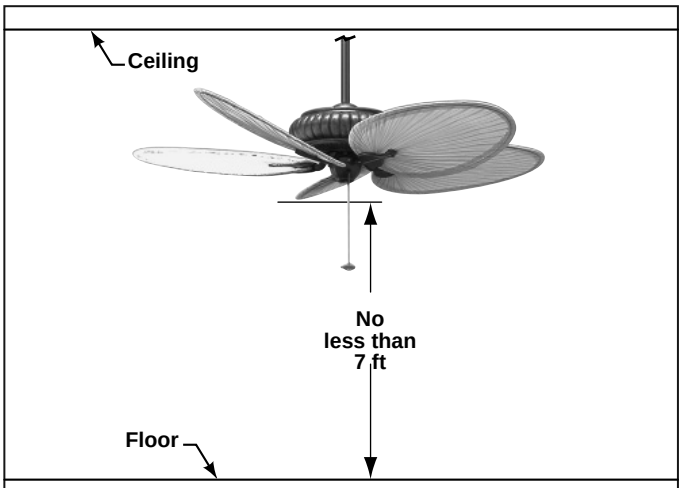

Figure 1

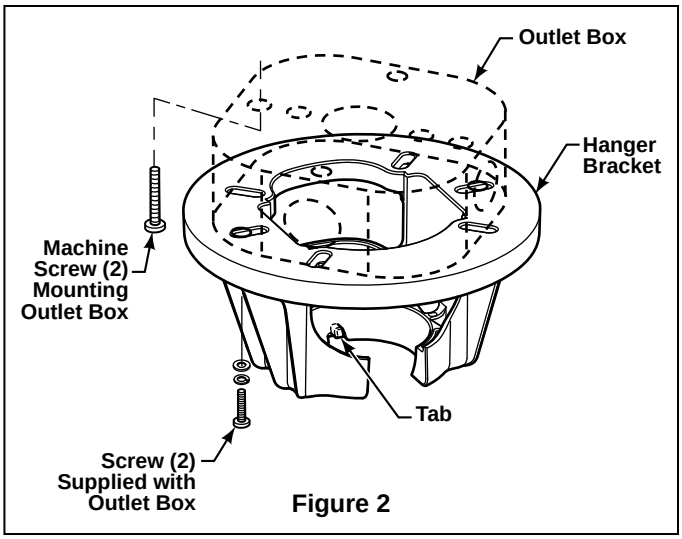

Figure 2

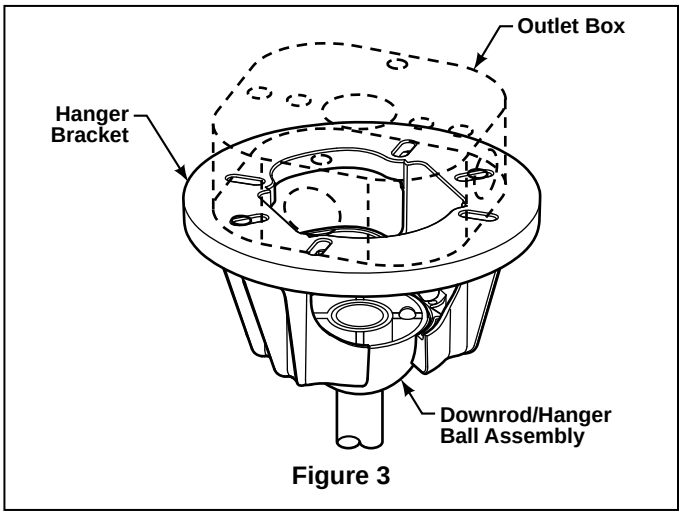

Figure 3

⚠ WARNING

To avoid possible shock, do not pinch wires between the downrod/hanger ball assembly and the hanger bracket.

How to Wire Your Ceiling Fan - Pull Chain

If you feel that you do not have enough electrical wiring knowledge or experience, have your fan installed by a licensed electrician.

⚠ WARNING

To avoid possible electrical shock, be sure electricity is turned off at the main fuse box before wiring.
NOTE: If you are not sure if the outlet box is grounded, contact a licensed electrician for advice, as it must be grounded for safe operation.

1. Connect the green/yellow grounding lead from the hanger ball and the green/yellow grounding lead from the hanger bracket to the supply grounding conductor (this may be a bare wire or wire with green colored insulation). Securely connect wires with wire connectors supplied.

2. Securely connect the blue fan motor wire to the blue supply (neutral) wire using wire connector supplied. Securely connect the brown fan motor wire and orange wire to the live supply (normally black but marked as a live supply with red sleeve) (Figure 1). Make sure all connections are secure.

3. Secure the ceiling canopy to the hanger bracket with threaded rods, external lock washers, and knurled knobs provided (see page 8). Your fan is now wired to be turned on and off from the fan pull chain speed control.

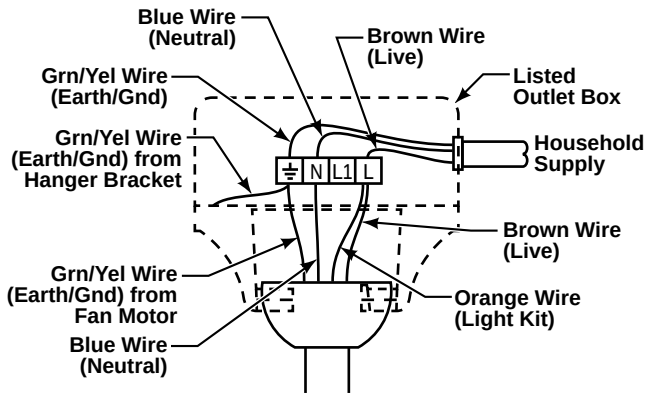

Figure 1

⚠ WARNING

Check to see that all connections are tight, including ground, and that no bare wire is visible at the wire connectors, except for the ground wire. Do not operate fan until the blades is in place. Noise and motor damage could result.

Operating Instructions - Pull Chain

1. Restore electrical power to the outlet box by turning the electricity on at the main fuse box.
2. Check the operation of the fan by gently pulling on the pull chain switch. (Figure 2)
3. If airflow is desired in the opposite direction, turn the fan off and wait for the blades to stop turning. Then slide the reverse switch to the opposite position and turn fan on again. Your fan model is equipped with a 4-position, 3-speed, pull chain switch. The operating sequence is as follows:

1st Pull = HIGH	3rd Pull = LOW
2nd Pull = MEDIUM	4th Pull = OFF

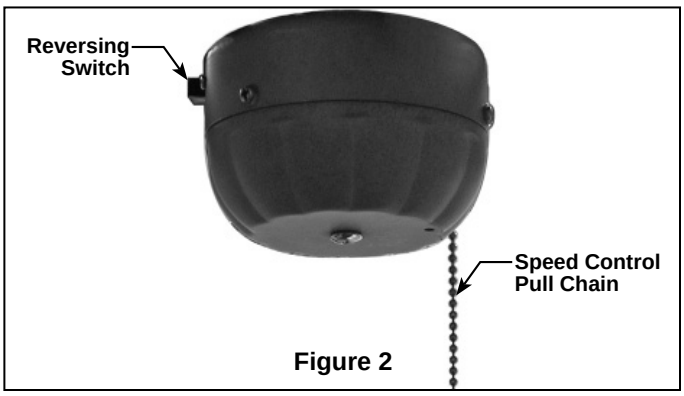

Figure 2

Installing the Canopy Housing

NOTE: *This step is applicable* ***after*** *the necessary wiring is completed. (see page 7)*

⚠ WARNING

To avoid possible fire or shock, make sure that the electrical wires are completely inside the canopy housing and not pinched between the housing and the ceiling.

1. Screw in two threaded rods into the Hanger Bracket (Figure 1).

NOTE: *The threaded rods in the hanger bracket serves as guides for easier installation.*

2. Securely attach the Canopy Housing to the Hanger Bracket using the external lockwashers and knurled knobs supplied with your fan (Figure 2).

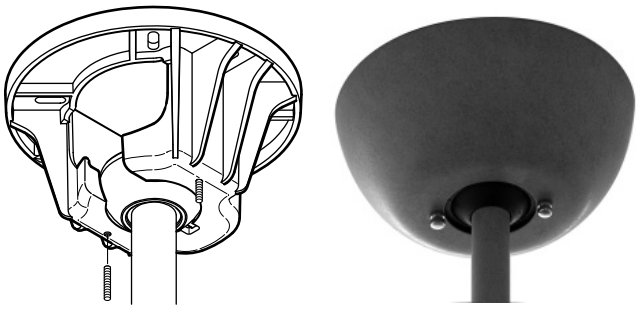

NOTE: *Supply wires and fan wires omitted for clarity.*

Figure 1 **Figure 2**

Mounting the Fan Blades

1. Remove and discard the (rubber) motor "stops" by removing the five screws. (Figure 1)

INSTALLATION NOTE

Do not connect fan blades until the fan is completely installed. Installing the fan with blades assembled may result in damage to the fan blades.

2. Lay flat side of blade holder arm on a flat surface with the inside of the blade holder arm facing up. This is the side with the threaded posts and pitched foot.

3. Position the (plastic) palm leaf, or the (plastic) woven bamboo blade, or the (plastic) wood blade over the blade holder with the threaded posts showing. Make sure the bottom edge of the blade is fully seated against the blade holder arm.

4. Place blade holder cover on top of the blade, positioning the holes over the threaded posts.

5. With a Phillips screwdriver, thread both screws into the posts but do not fully tighten.

6. Prior to final tightening, position the center line of the blade holder with the center of the end of the blade.

7. Tighten both screws to secure the blade. (Figure 2)

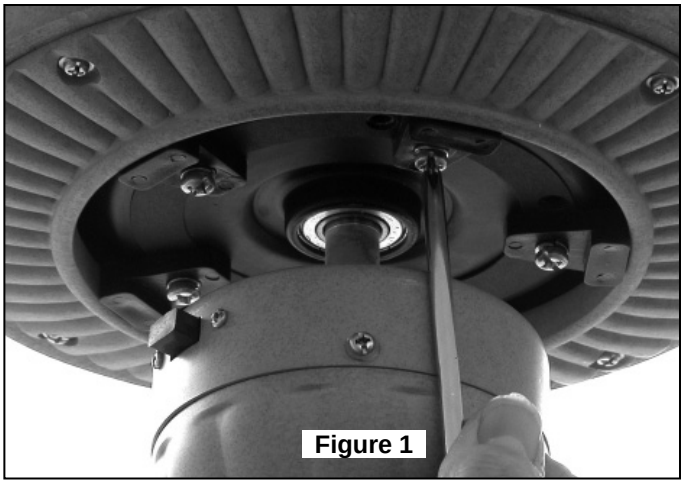

Figure 1

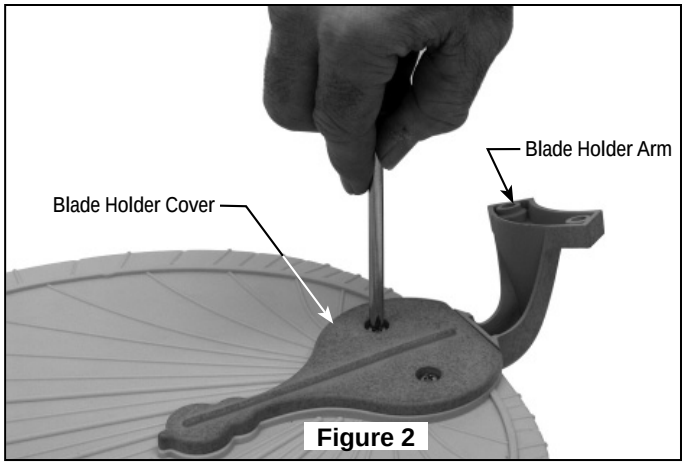

Figure 2

Mounting the Fan Blades (cont'd)

8. Attach Blade Holders to the bottom of the Fan Motor Hub using the ¼–20 x ⅝″ Socket Head Screws w/Lockwashers as shown in Figure 3.

9. Make sure the screws with lockwashers securing the Blade Holders to the Fan Motor Hub are tight and that the Blade Holders are properly seated. (Figure 3)

NOTE: *Periodically check Blade Holder hardware and re-secure if necessary. (see Maintenance below)*

⚠ WARNING

To reduce the risk of personal injury, do not bend the blade holders when installing, balancing the blades or cleaning the fan. Do not insert foreign objects in between the rotating blades.

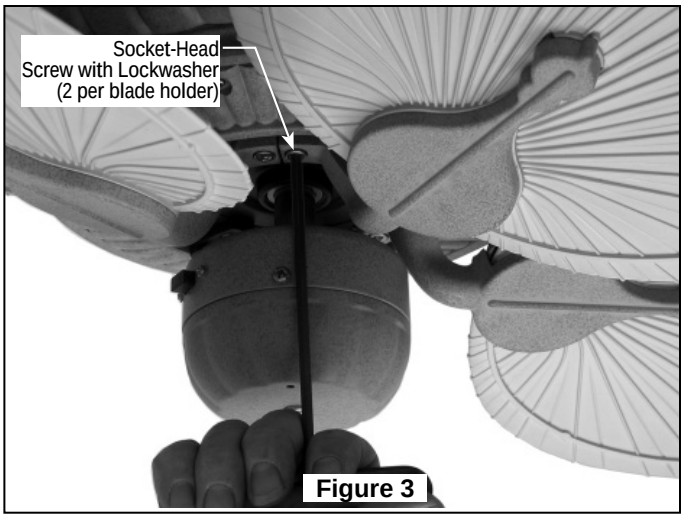

Figure 3

Maintenance

Periodic cleaning of your new ceiling fan is the only maintenance that is needed.
When cleaning, use only a soft brush or lint free cloth to avoid scratching the finish.
Abrasive cleaning agents are not required and should be avoided to prevent damage to finish.

CAUTION

Do not use solvents when cleaning your ceiling fan. It could damage the motor or the blades and create the possibility of electrical shock.

RECOMENDED: Periodically check that the blade arm to motor assembly hub screws are tight.

Blade Cleaning

Periodic light dusting of the Palm Leaf, Woven Bamboo, or Wicker blades is recommended. A feather duster will work best.

Avoid using water, cleansers, or harsh rags, which can warp and ruin the blades.

Parts List

Model #FP4320**-220

Ref. #	Description	Part #
1	Hanger Bracket Assembly	APG510BL
2	*Wet Downrod/Hanger Ball Assembly Containing:*	ADRW6**
2a	Hanger Ball Assembly	
2b	Wet Downrod with Rubber Gasket	
2c	Rubber Gaskets (2)	
2d	Clevis Nut	
2e	Hairpin Clip	
2f	Clevis Screw	
3	Ceiling Canopy	PG157**
4	Motor Coupling Cover Assembly	AP43266**
5	Fan Motor/Housing Assembly	AMA4320**-220
6	Traditional Blade Arm (Set of 5)	AP43210**
7	Cover Blade Arm (Set of 5)	AP3220**
8	*Blade Mounting Hardware Bag Containing:*	HDWFP4320**
	Phillips Washer-Head Screws, 3/16"–24 x 10 mm (11)	
	Phillips Screwdriver, 4"	
	Blade Holder Mounting Hardware Bag Containing:	
	¼–20 x ⅝" Socket Head Screw with Lockwasher (11)	
	"T" Allen Head Wrench	
	Hardware Bag Containing:	
	5/32" Threaded Rods (2)	
	5/32" External Lockwasher (2)	
	Knurled Knobs (2)	
	Fob and Chain Coupler	
	Balance Kit	
	#8–32 x ¾" Junction Box Screws, Stainless Steel (2)	
	Wire Connectors (4)	

***Insert FINISH CODES (Refer to fan model number located on downrod support)*

Before discarding packaging materials, be certain all parts have been removed

How To Order Parts

When ordering repair parts, always give the following information:

- Part Number
- Part Description
- Fan Model Number

Contact your retail store for repair parts.

The Belleria® FP4320**-220

Exploded-View

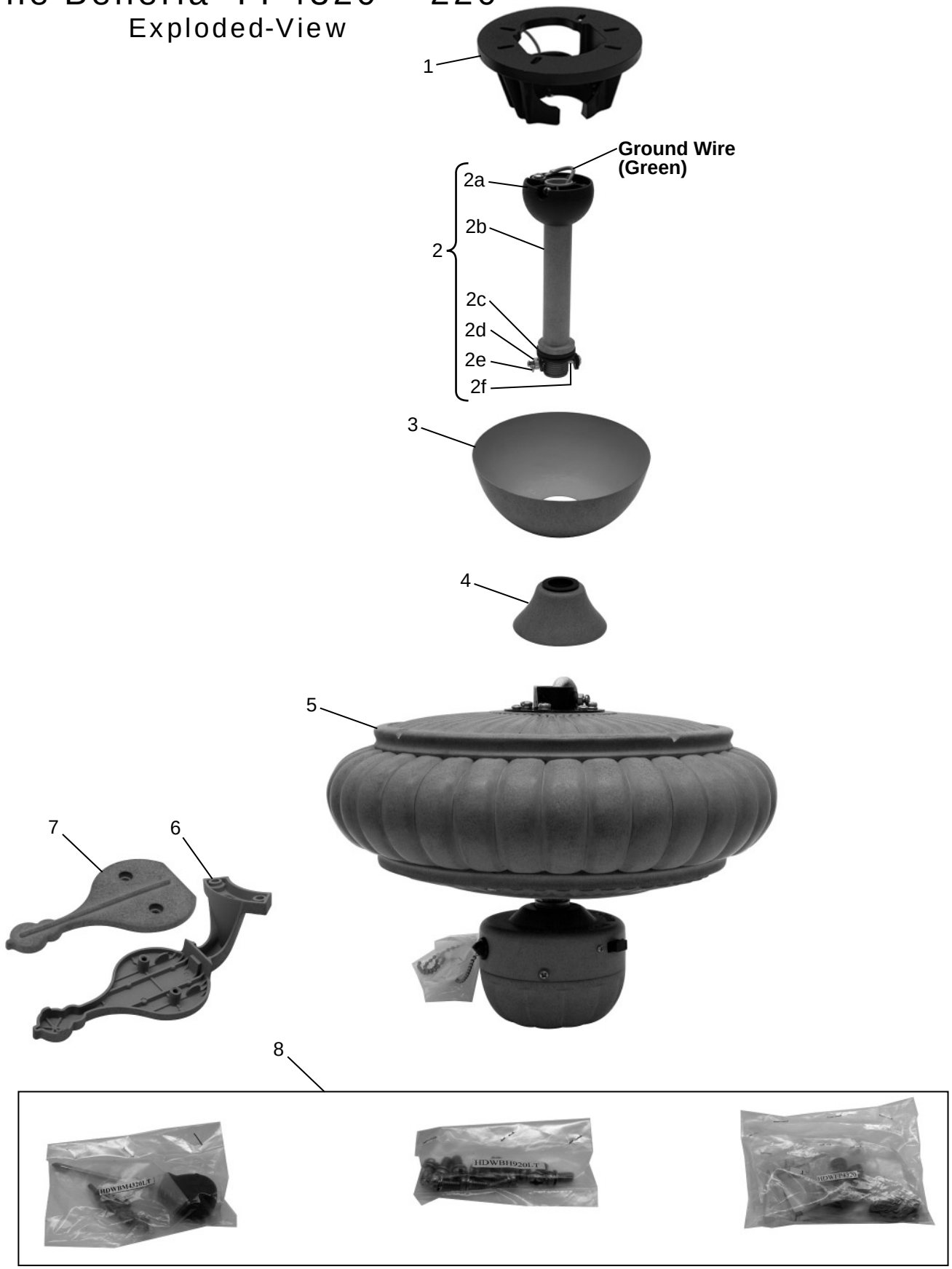

Figure 1

NOTE: *The illustration shown is not to scale or its actual configuration may vary*

Trouble Shooting

⚠ WARNING

For your own safety turn off power at fuse box or circuit breaker before trouble shooting your fan.

Trouble	Probable Cause	Suggested Remedy
1. FAN WILL NOT START	**1.** Fuse or circuit breaker blown. **2.** Loose power line connections to the fan, or loose switch wire connections in the switch housing. **3.** Reversing switch in neutral position.	**1.** Check main and branch circuit fuses or circuit breakers. **2.** Check line wire connections to fan and switch wire connections in the switch housings. **CAUTION: Make sure main power is turned off !** **3.** Make sure reversing switch position is all the way to one side.
2. FAN SOUNDS NOISY	**1.** Blades not attached to fan. **2.** Loose screws in motor housing. **3.** Screws securing fan blade holders to motor hub are loose. **4.** Wire connectors inside housing rattling. **5.** Motor noise caused by solid state variable speed control. **6.** Screws holding blades to blade holders are loose.	**1.** Attach blades to fan before operating. **2.** Check to make sure all screws in motor housing are snug (not over-tight). **3.** Check to make sure the screws which attach the fan blade holders to the motor hub are tight. **4.** Check to make sure wire connectors in switch housing are not rattling against each other or against the interior wall of the switch housing. **CAUTION: Make sure main power is turned off !** **5.** Some fan motors are sensitive to signals from solid-state variable speed controls. Solid-state controls are not recommended, choose an alternative control method. **6.** Tighten screws securely.
3. FAN WOBBLES EXCESSIVELY	**1.** Setscrew and nut in downrod support is loose. **2.** Setscrew in downrod/hanger ball assembly is loose. **3.** Screws securing fan blade holders to motor hub are loose. **4.** Blade holders not seated properly. **5.** Hanger bracket and/or ceiling outlet box is not securely fastened. **6.** Fan blades out of balance.	**1.** Tighten both setscrews and nuts securely in downrod support. **2.** Tighten the setscrew in the downrod/hanger ball assembly. **3.** Check to be sure screws which attach the fan blade holders to the motor hub are tight. **4.** Check to be sure the fan blade holders seat firmly and uniformly to the surface of the motor housing. If holders are seated incorrectly, loosen the screws and retighten. **5.** Tighten the hanger bracket screws to the outlet box, and secure outlet box. **6.** Interchanging position of fan blades can redistribute the weight and result in a smoother operation. For example, exchange blades in positions 1 and 3 or 1 and 4. If this does not improve wobble, exchange 2 and 4 or 2 and 5.
4. NOT ENOUGH AIR MOVEMENT		**1.** If possible, consider using a longer downrod. For example, use a 12” downrod instead of the 6” downrod that comes with your fan. **2.** Consider using a narrow blade instead of the wide oval. Narrow blades are available in the palm leaf and woven bamboo series.

10983 Bennett Parkway
Zionsville, IN 46077
(888) 567-2055
FAX (866) 482-5215
Outside U.S. call (317) 733-4113
Visit Our Website @ www.fanimation.com

Copyright 2010 Fanimation

2010/02